PNEUMATIC VACUUM INNOVATIONS

INNOVATION NOT LIMITATION

PRODUCTS

- SINGLE STAGE GENERATORS
- MULTI STAGE GENERATORS
- VACUUM ACCESSORIES

SINGLE STAGE GENERATORS

F Series Vacuum Generators

The F Series Vacuum Generator is a small, simple and inexpensive device that provides surprisingly high performance for a generator of this class. All connections are NPT thread that makes this device a convenient "fitting style" generator.

There are options for push-to-connect type ports also. A mufler is included with each generator.

HOME
ABOUT US
CONTACT US
PRODUCTS
APPLICATIONS
CAPABILITIES
FIND DISTRIBUTOR

S SINGLE STAGE VACUUM GENERATORS
M MULTI STAGE VACUUM GENERATORS
A VACUUM ACCESSORIES

TEL : 888-281-4784
ENGINEERING@PNEUMATIC-VACUUM.COM

REQUEST CATALOG

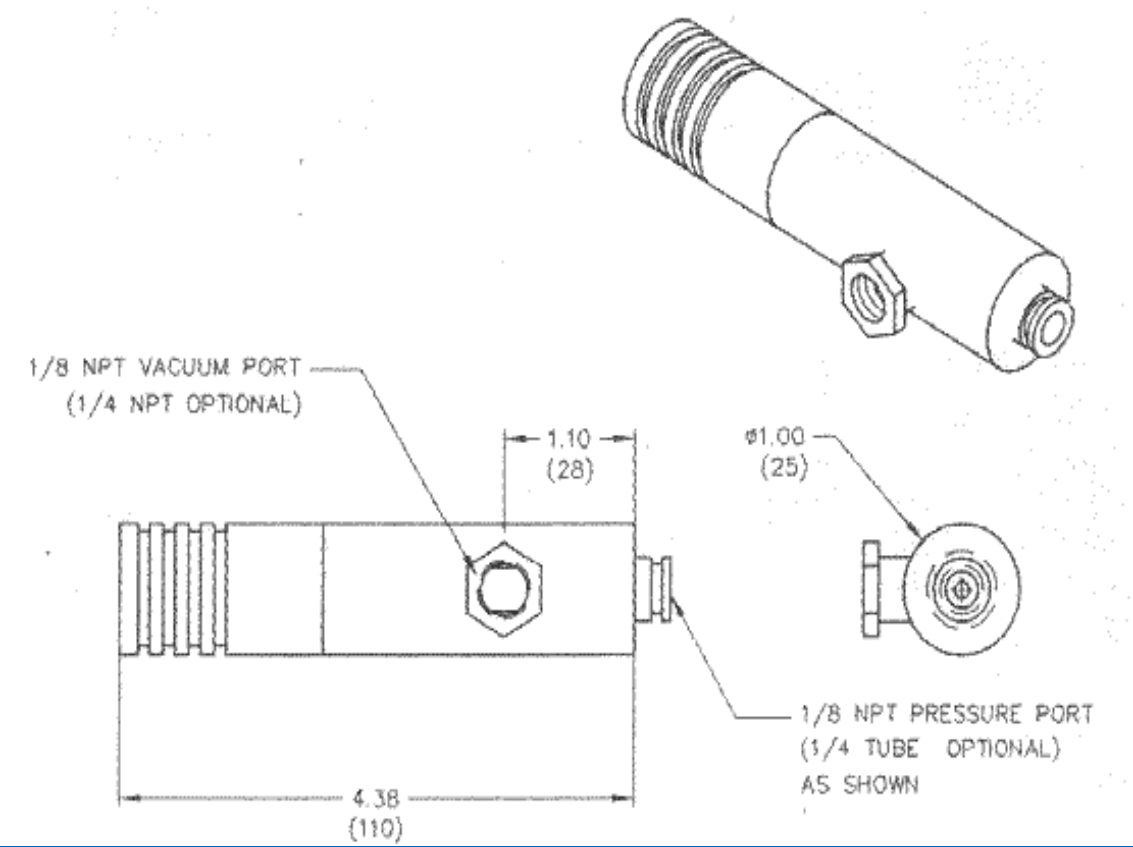

F Series Vacuum Generator Models:

Part#	Air Consumption	Vacuum Level @60psi
FM05	2.6 scfm	20 in-Hg
FH05	2.6 scfm	25 in-Hg
FM07	3.6 scfm	20 in-Hg
FH07	3.6 scfm	25 in-Hg
FM08	4.6 scfm	20 in-Hg
FH08	4.6 scfm	25 in-Hg

PNEUMATIC VACUUM INNOVATIONS ©2006 ALL RIGHTS RESERVED.
POWERED BY KILN MEDIA.COM